MECHANICAL PRESS

Mechatronics Design

Erdi Sayar 100224032 erdisayar@hotmail.com

Hasan Doğan 100223022 hasandogan10@yahoo.de

Mechanical Press

EXAMPLE PROBLEM 1.8

Figure 1.29 shows a mechanical press used to exert large forces to insert a small part into a larger one. Draw a kinematic diagram, using the end of the handle as a point of interest. Also compute the degrees of freedom.

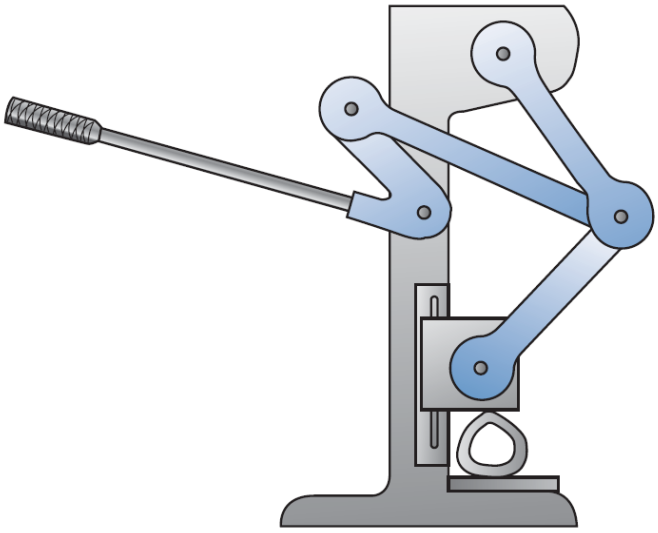

Figure 1: Mechanical Press for Example Problem 1.8[1]

SOLUTION: 1. *Identify the Frame*

The bottom base for the mechanical press sits on a workbench and remains stationary during operation. Therefore, this bottom base is designated as the frame. The motion of all other links is determined relative to the bottom base. The frame is numbered as link 1.

2. *Identify All Other Links*

Careful observation reveals five other moving parts:

Link 2: Handle

Link 3: Arm that connects the handle to the other arms

Link 4: Arm that connects the base to the other arms

Link 5: Press head

Link 6: Arm that connects the head to the other arms

[1] MACHINES AND MECHANISM APPLIED KINEMATIC ANALYSIS

3. ***Identify the Joints***

Pin joints are used to connect the several different parts. One connects the handle to the base and is labeled as joint *A*. Another connects link 3 to the handle and is labeled as joint *B*. Another connects link 4 to the base and is labeled as *C*. Another connects link 6 to the press head and is labeled as *D*. It appears that a pin is used to connect the three arms—links 3, 4, and 6—together. Because three separate links are joined at a common point, this must be modeled as two separate joints. They are labeled as *E* and *F*. A sliding joint connects the press head with the base. This joint is labeled as *G*.

4. ***Identify Any Points of Interest***

Motion of the end of the handle is desired and is labeled as point of interest *X*.

5. ***Draw the Kinematic Diagram***

The kinematic diagram is given in Figure 2

6. ***Calculate Mobility***

To calculate the mobility, it was determined that there are six links in this mechanism, as well as six pin joints and one slider joint. Therefore,

$$L = 6,\ j = (6\,\text{pins} + 1\text{slider}) = 7\ ,\ \lambda = 3$$

$$F = \lambda.(\text{L} - \text{j} - 1) + \sum_{n=1}^{L} f_i$$

$$F = 3.(6 - 7 - 1) + 7$$

$$\boxed{F = 1}$$

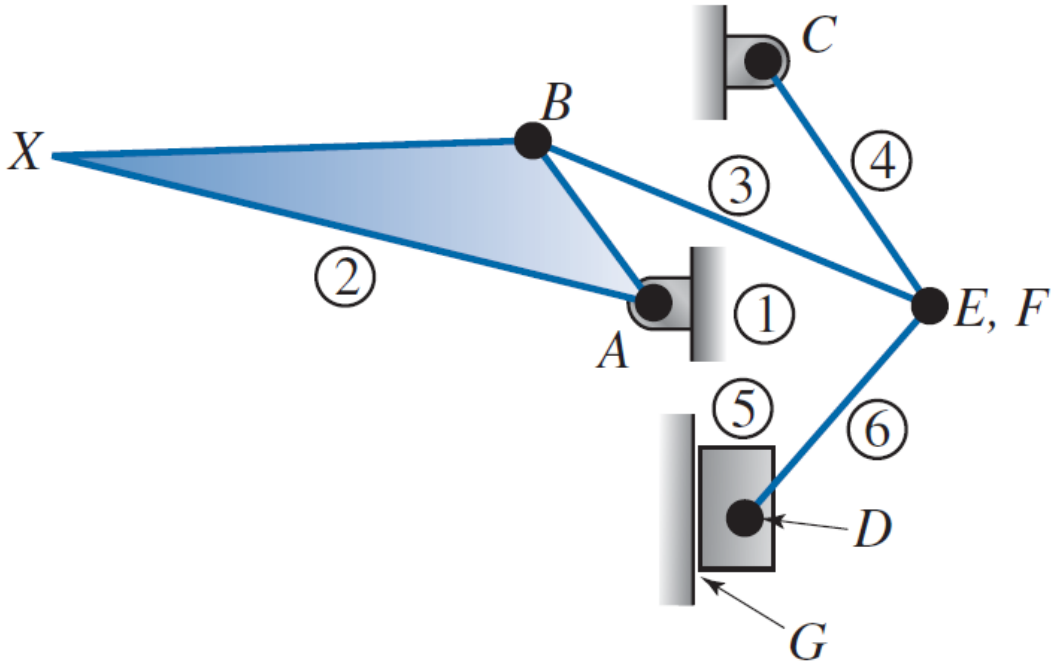

Figure 2: Kinematic Diagram for Example 1.8[2]

With one degree of freedom, the mechanical press mechanism is constrained. Moving only one link, the handle, precisely positions all other links in the press, sliding the press head onto the work piece.

[2] MACHINES AND MECHANISM APPLIED KINEMATIC ANALYSIS

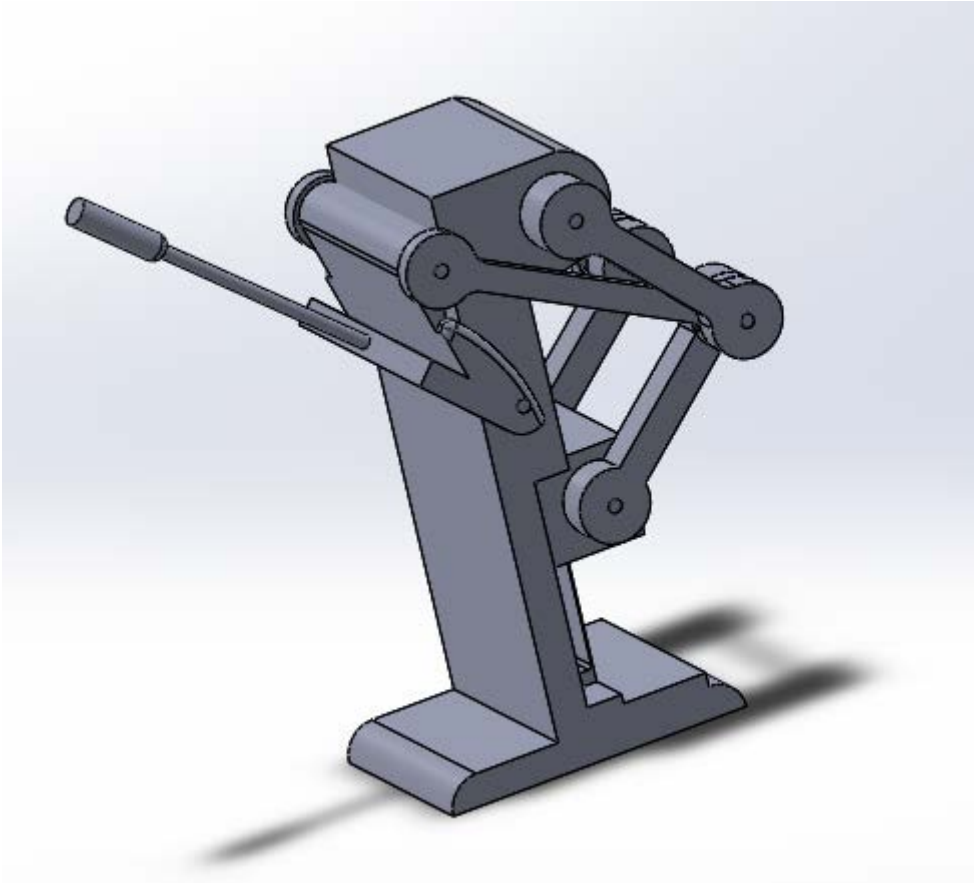

Figure 3: Mechanical Press in SW

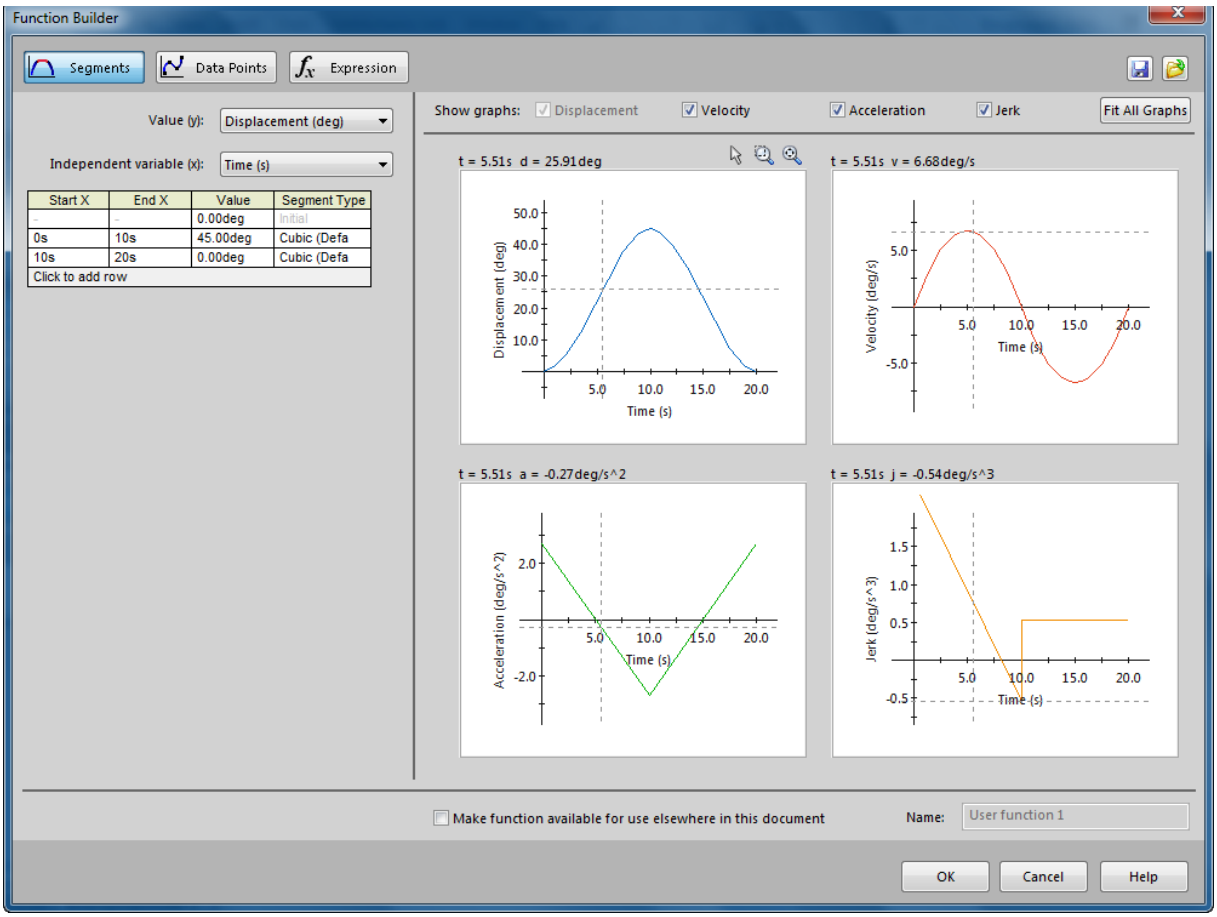

Figure 4: Motor Characteristics for Link 2

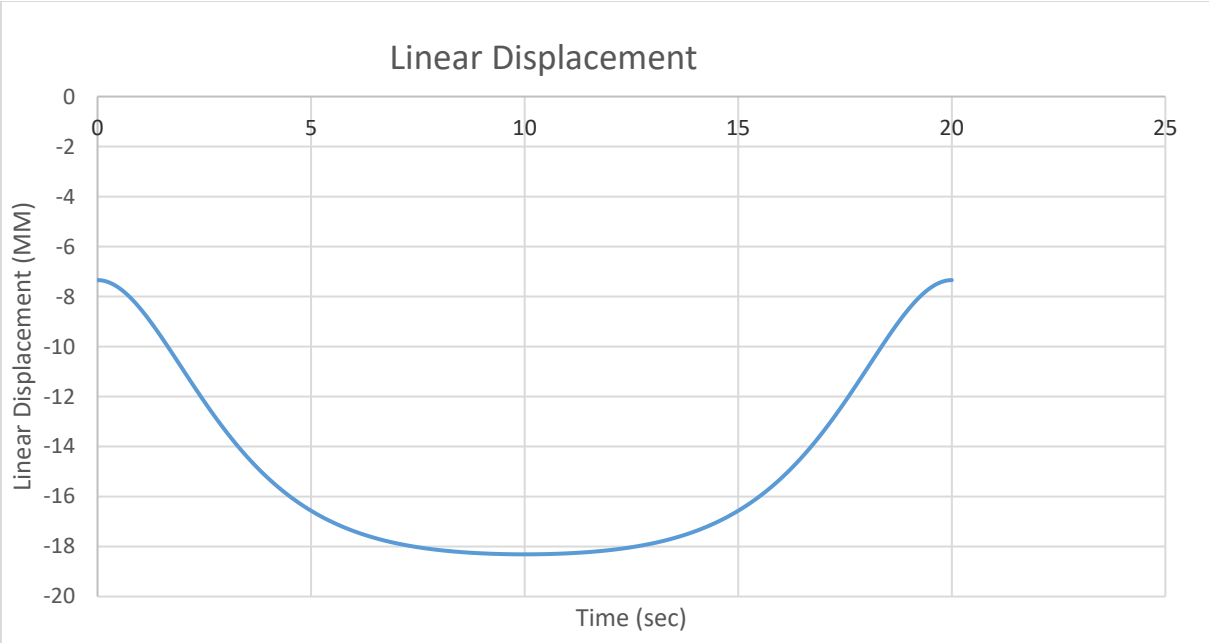

Figure 5: Linear Displacement (Y-Component) for Link 5

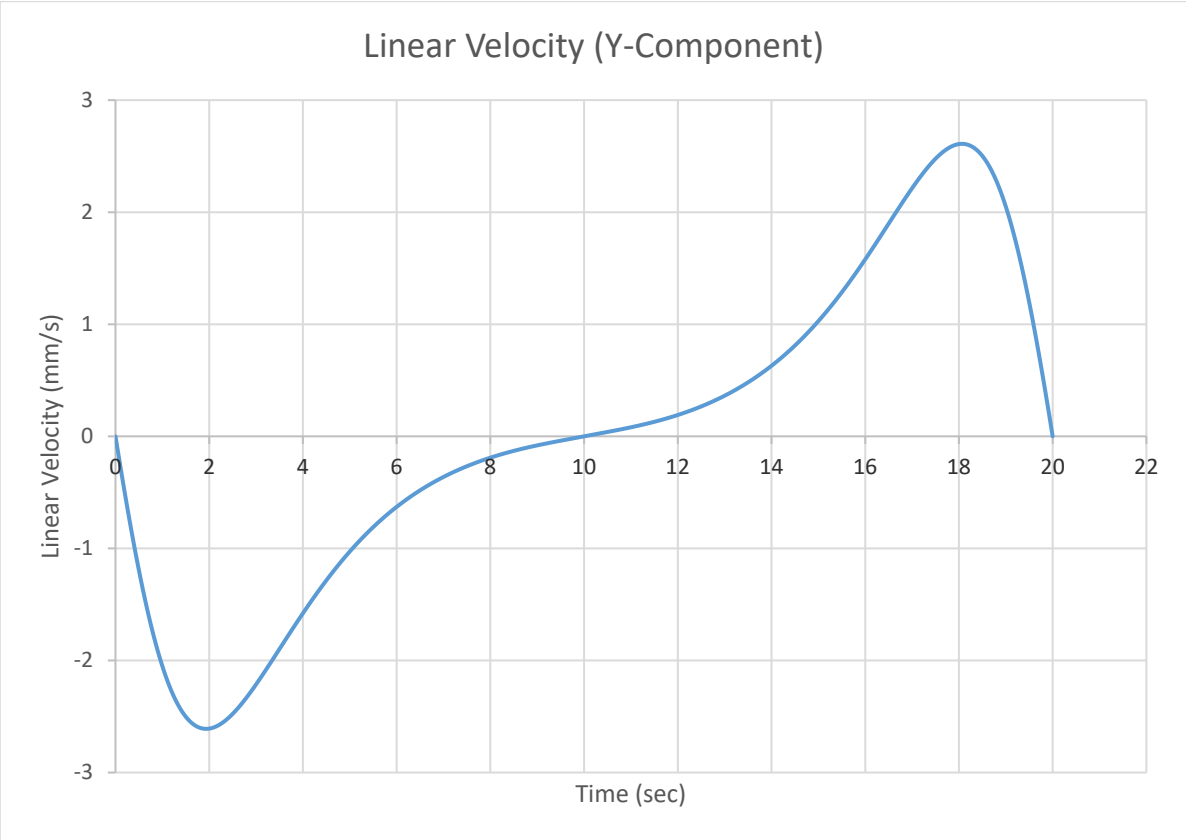

Figure 6: Velocity (Y-Component) for Link 5

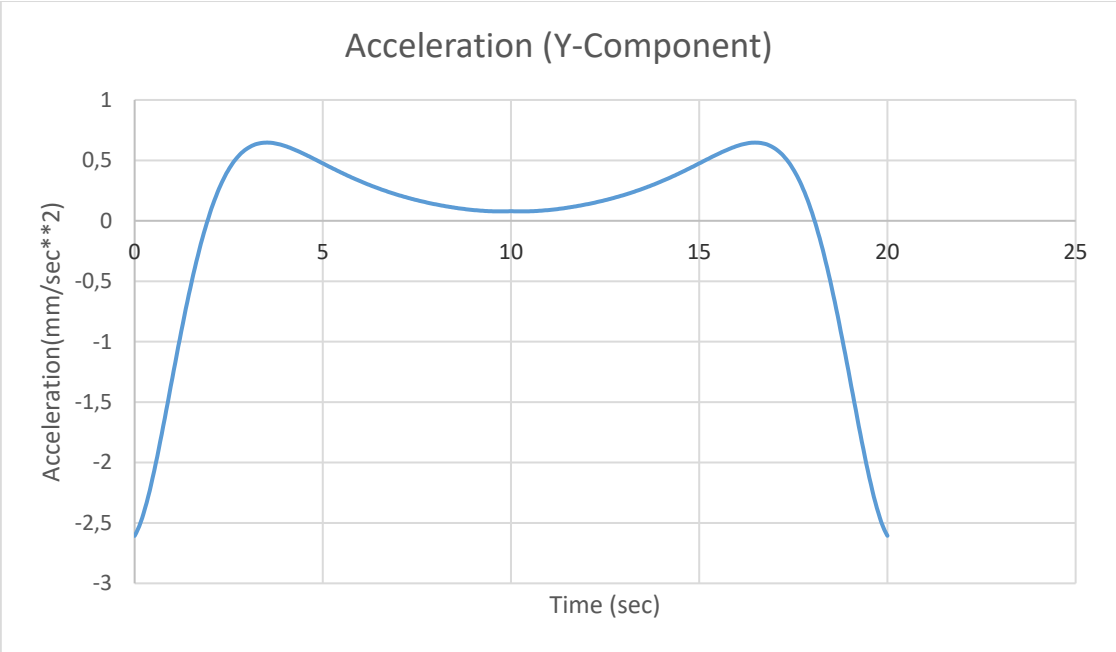

Figure 7: Acceleration (Y-Component) for Link 5

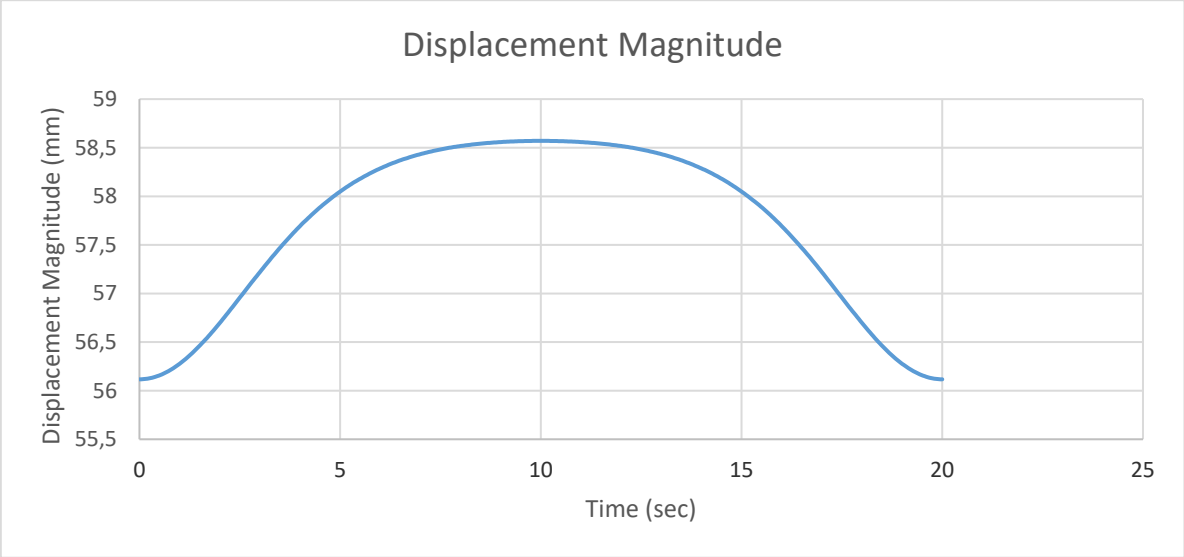

Figure 8: Linear Displacement (Magnitude) for Link 5

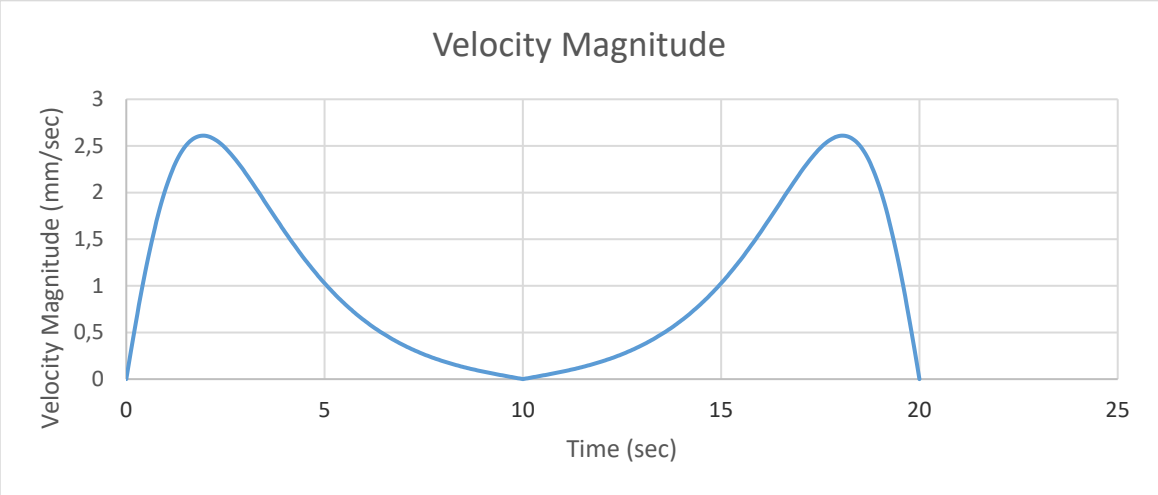

Figure 9: Velocity (Magnitude) for Link 5

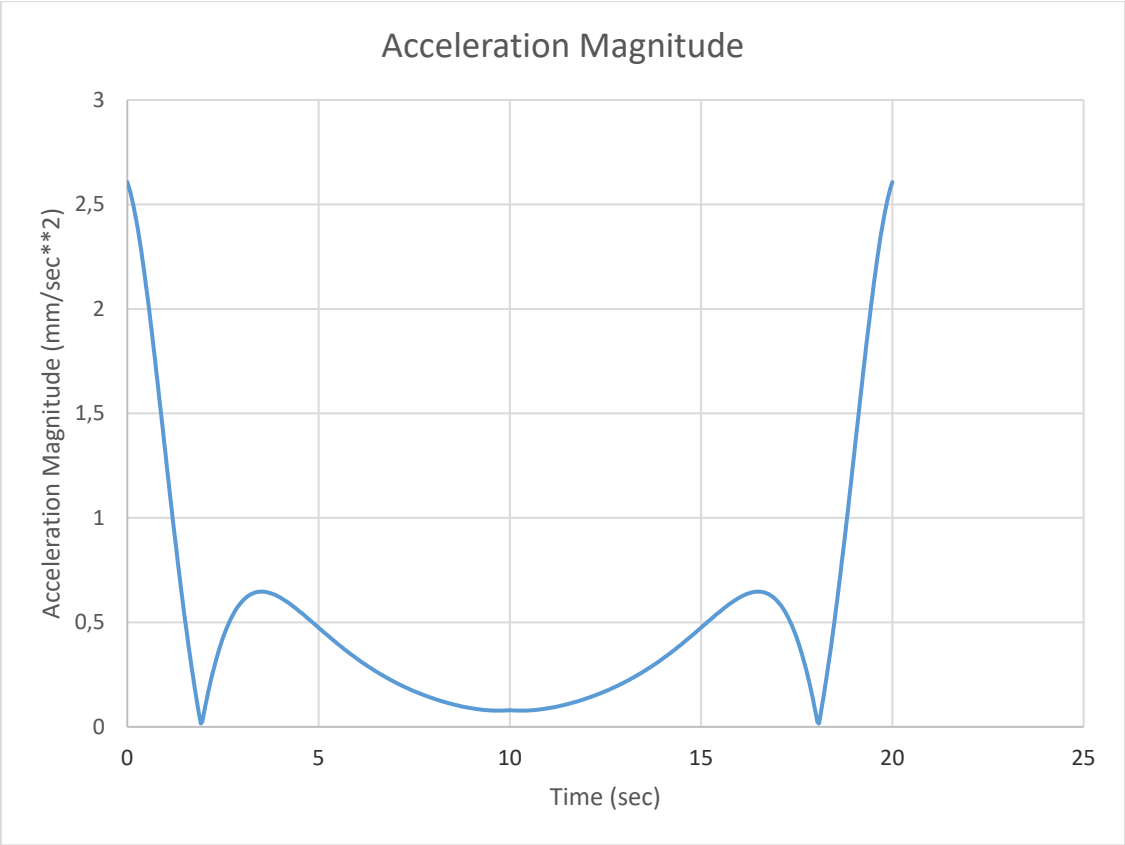

Figure 10: Acceleration (Magnitude) for Link

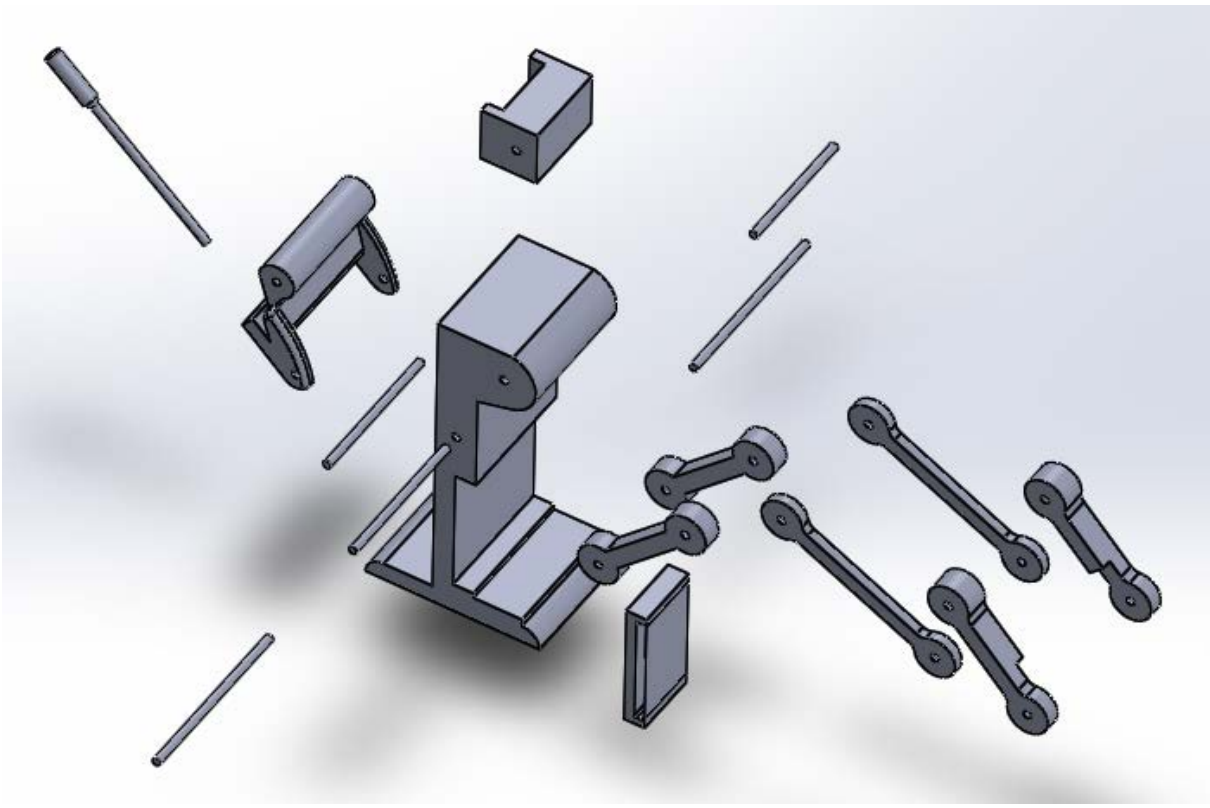

Figure 11 : Explosed view

Reference:

[1] MYSKA D.H., “MACHINES AND MECHANISM APPLIED KINEMATIC ANALYSIS” , 1999 , P17